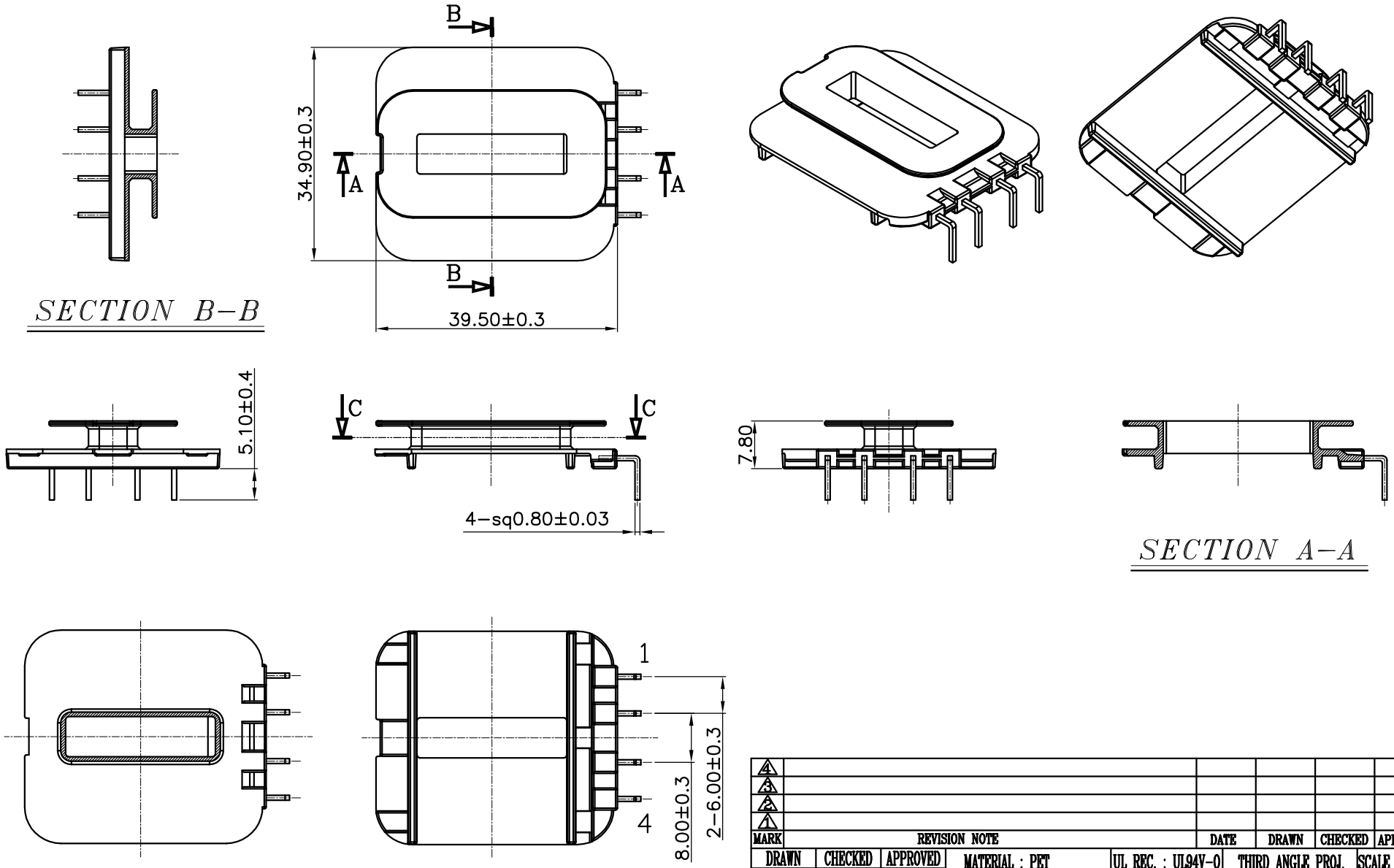

MARK	REVISION NOTE	DATE	DRAWN	CHECKED	APPROVED
4					
3					
2					
1					

DRAWN	CHECKED	APPROVED	MATERIAL : PET	UL REC. : UL94V-0	THIRD ANGLE PROJ.	SCALE : 1/1
S H, Kim	D B, Han	C, Park	Z : PIN LENGTH (According to customer's request)	DATE : 2012.10.16	TOLERANCE :±0.2 (Unless otherwise specified)	UNIT : m/m

주식회사 대흥보빈
DAE HEUNG BOBBIN CO., LTD

TITLE: EE 42*13 "V" (4P)

DWG NO: DH-121107-3077-04